The LPC2103 microcontroller

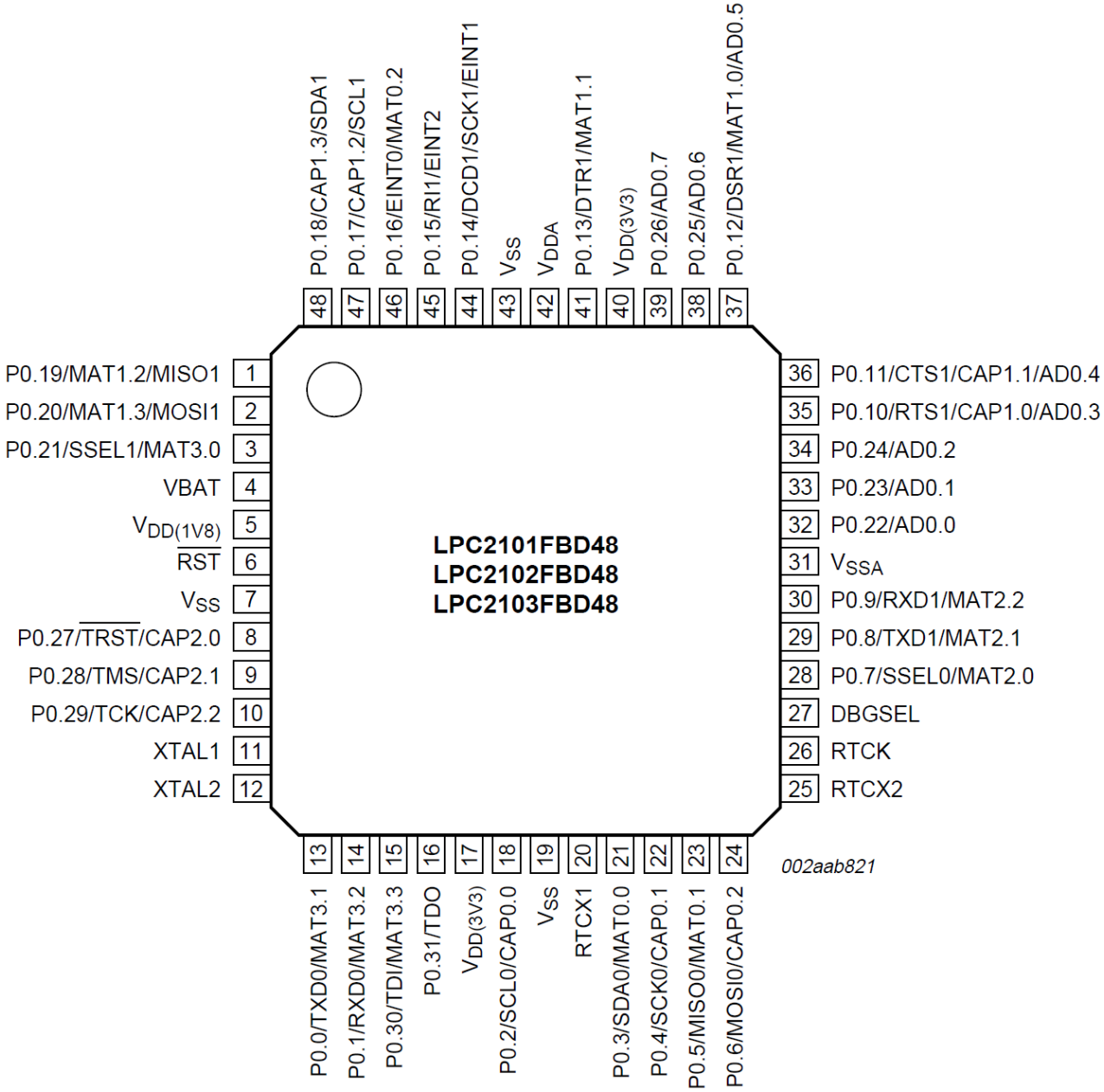

The LPC2103 microcontroller

AHB: Advanced High-performance Bus

APB: ARM Peripheral Bus

GPIO: General Purpose Input/Output

ADC: Analog-Digital Converter

PLL: Phase Locked Loop

VIC: Vectored Interrupt Controller

RTC: Real-Time Calendar

UART: Universal Asynchronous Receiver-Transmitter

I2C: Inter Integrated Circuit (Philips)

SSP: Synchronous Serial Port

SPI: Serial Peripheral Interface (Motorola)

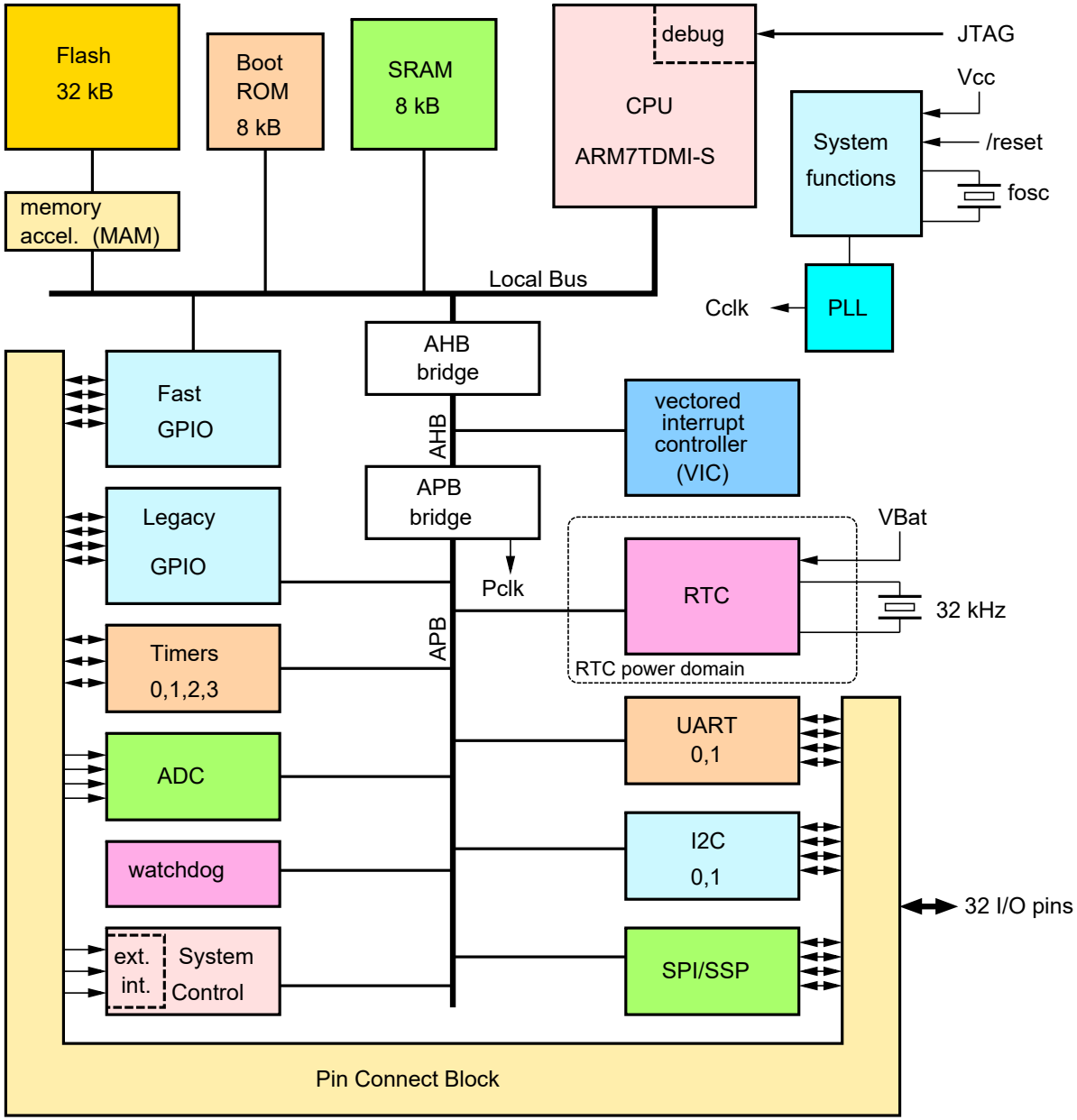

LPC2103. Memory map

- Memory mapped I/O
- Bootloader ROM for Flash programming
- User code can run from Flash or RAM

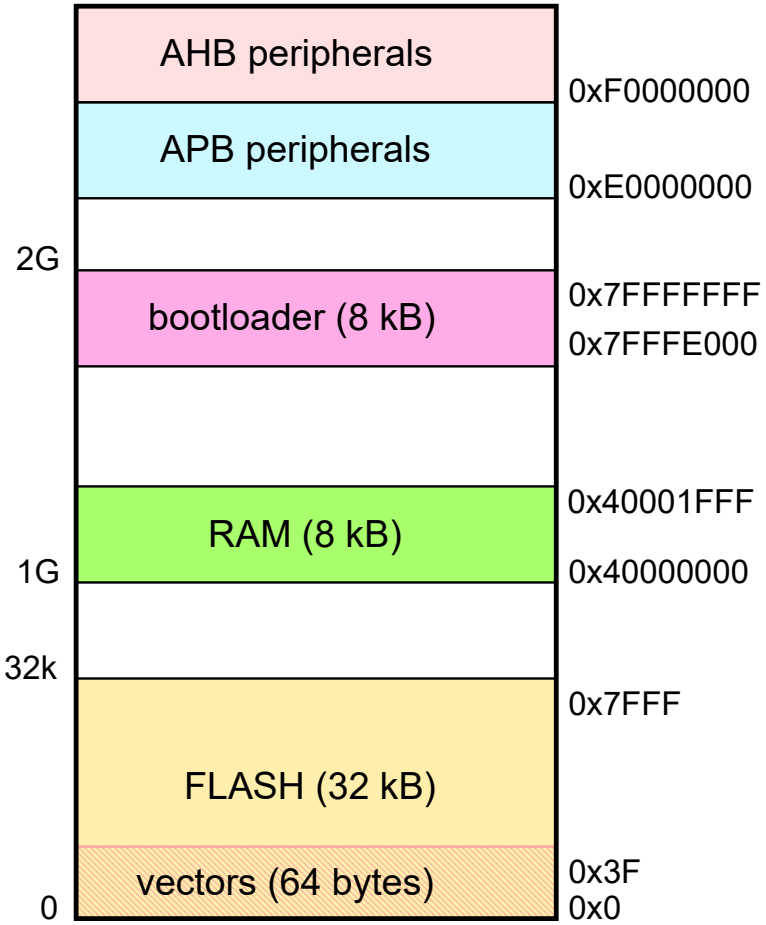

Exception Handling

- **When an exception occurs, the ARM:**
  - Copies CPSR into SPSR_<mode>
  - Sets appropriate CPSR bits:
    - Changes to ARM state
    - Changes to related mode
    - Disables IRQ
    - Disables FIQ (only on fast interrupts)
  - Stores the return address in LR_<mode>
  - Sets PC to vector address
- **To return, exception handler needs to:**
  - Restore CPSR from SPSR_<mode>
  - Restore PC from LR_<mode>

    (more about this later…)

This can only be done in ARM state.

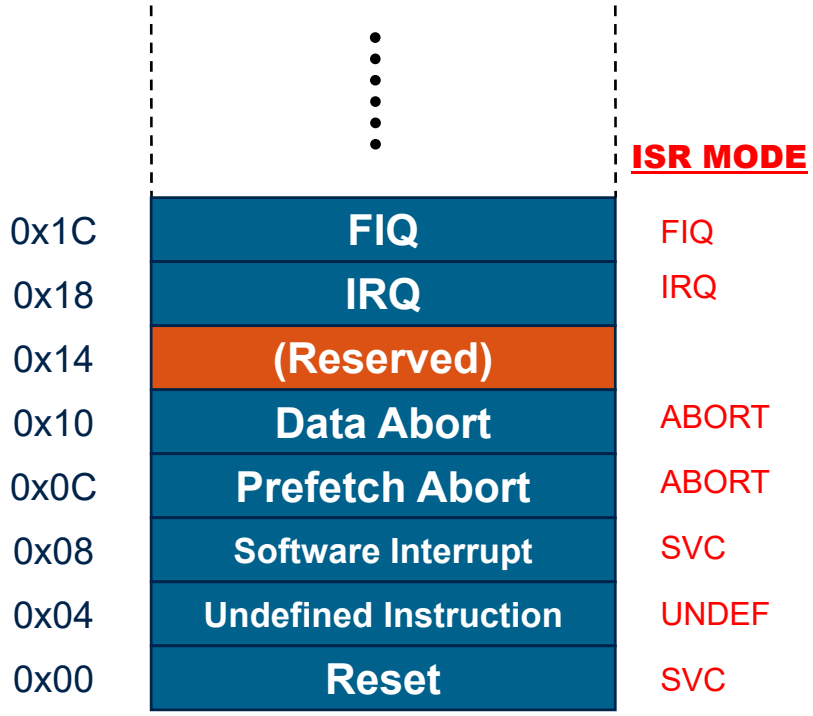

Vector Table

ISR: Interrupt Service Routine

UART: Asynchronous serial communications

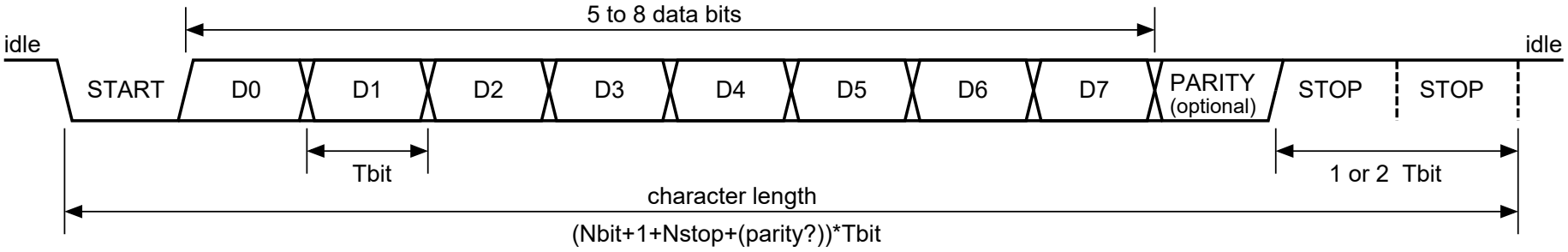

- Asynchronous: no clock transmitted
  - Requires accurate clocks (relative error less than 3%) in both receiver and transmitter
- Character oriented
  - LSB first
  - Delimited by Start and Stop bits
  - Stop bits: minimum time with line high between characters
- Common data rates (data rate = 1/Tbit):

  300 bps, 1200 bps, 9600 bps 19200 bps, 38400 bps, 115200 bps

  UART0:

  THR: 0xE000C000 LSR: 0xE000C014